Operating Range:

- Max viscosity 200cSt
- Max system pressure 16BAR
- Flow up tp 140 m3/h
- Head up to 36m
- Temperature Range for PFA/PP from -5 to +80°C
- Temperature Range for PFA/PVDF from -35 to +100°C
- Electric motors from 1,5 to 18.5KW
- ATEX II - /3G cbk II C T5

Data for reference only. Parameters not associated

M PUMPS PROCESS s.r.l

Via dell'artigianato, 120
45015 Corbola (RO) Italy
Tel: +39 0426346304
Fax: +39 0426349126

info@mpumps.it
www.mpumps.it

Member of CISQ Federation
RINA
ISO 9001:2008
Sistema Qualità Certificato
ISO 14001:2004
273

A unit of Mischiatti GROUP

C MAG-PL

HORIZONTAL SEALLESS LINED CENTRIFUGAL MAGNETIC DRIVE PUMP, NO MECHANICAL SEAL

The best solution for moving highly corrosive liquids, difficult to seal fluids and high purity

Setting Innovative Standards

Epoxy primer and polyacrylic enamel water-based painting for the best chemical resistance against corrosion

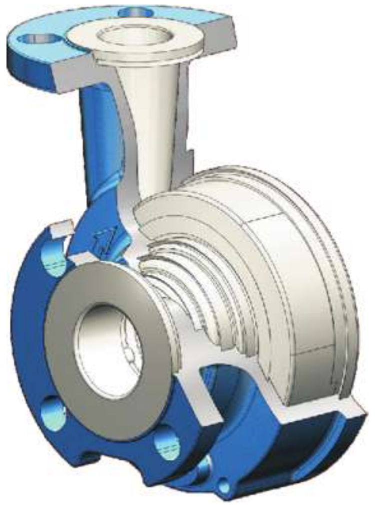

One single piece PFA front casing liner firmly anchored onto outer Ductile Iron shell to withstand piping loads, high system pressure and vacuum conditions. Transfer moulding technology assures constance of 5 mm thickness in PFA lining.

RWP QUICK CARTRIDGE KIT
to guarantee an easy and fast maintenance, materials PP and PVDF.

Drain Plug for safe release of hazardous fluids or for flushing and monitoring.

O ring sealing system to avoid leakages to the atmosphere- different materials available:

- EPDM
- VITON®
- FEP

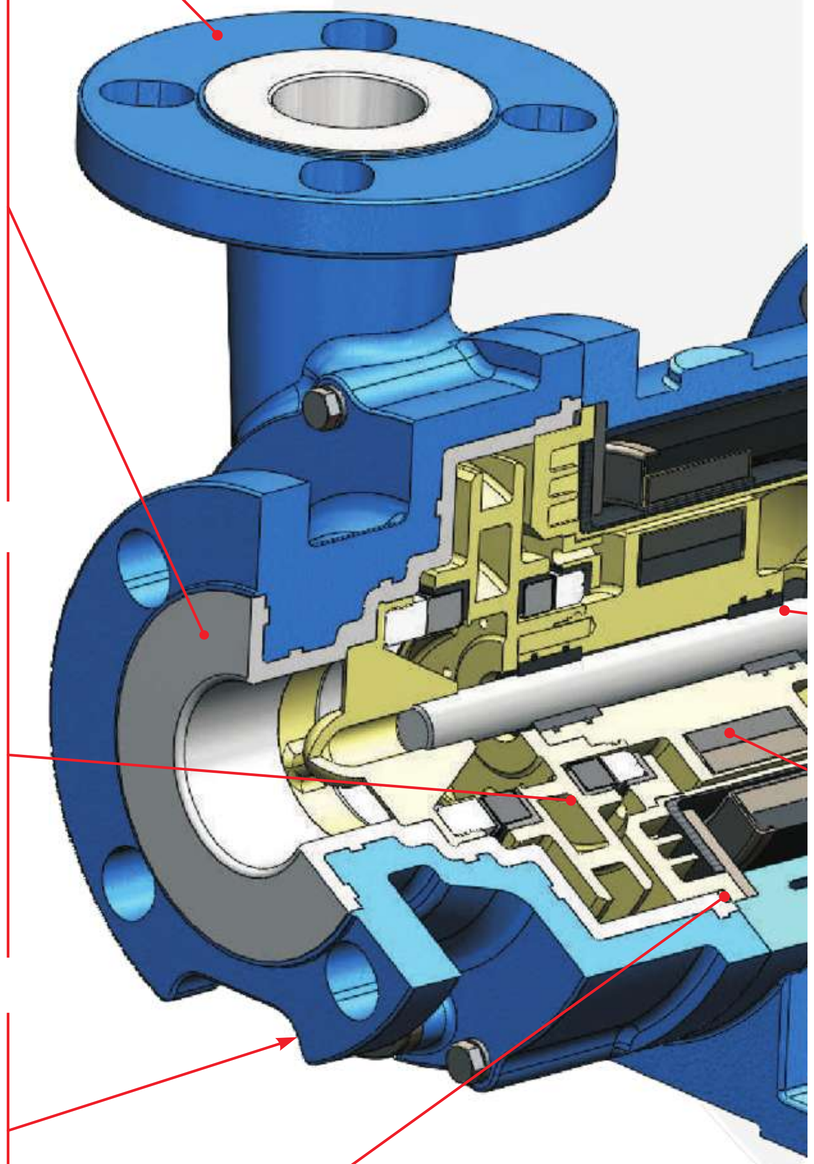

Successful Installations

Transfer of Hydrofluoric Acid, Nitric Acid and Phosphoric Acid in a Germany based Fine Chemical Plant

C MAG-PL50 installed into Fiscal Sampling Systems for the oil and gas.

Bekaert China application for waste water transferring

C MAG-PL80 applied for truck unloading of H2SO4 at 96% concentration

Pump Codification

0	PL	C2	050	GZ	Z	V	C	A	U	10	C

This configuration for complete unit only

Mat. parti bagnate / RWP mat.

P	PP
V	PVDF
Z	ETFE
W	PFA

Mat. corpo pompa / Pump casing mat.

GZ	per corpo in GGG 40.3 rivestito internamente in ETFE / for GGG 40.3 pump body with internal ETFE lining
GW	per corpo in GGG 40.3 rivestito internamente in PFA for GGG 40.3 pump body with internal PFA lining

Modello pompa / Pump model

050 - C MAG-PL 50
065 - C MAG-PL 65
080 - C MAG-PL 80
100 - C MAG-PL 100

Serie pompa / Pump series

Gruppo merceologico / Product type

PL	Pompa lined / Lined pump
PA	Pompa ATEX / ATEX pump

Prodotto finito / Complete unit

Mat. O-Ring / O-Ring mat.

E	EPDM
V	Viton
F	FEP
S	Fluor-Silicon
K	Kalrez
C	Chemraz

Mat. boccole / Bushings mat.

C	PTFEC (standard)
G	PTFEG
P	Carbone puro / Hard carbon
S	α-SSiC - Carburo di silicio / Silicon Carbide

Materiale Albero-Reggispinta girante / Shaft-Impeller thrust bearing material

A	Al_2O_3 - PTFEC (standard)
S	α-SSiC - α-SSiC
D	α-SSiC - PTFEC

Connessioni / Connections

U	Flangiate universali / Universal flanged

Grandezza motore / Motor size

10	IEC 90	34	NEMA 143 TC
12	IEC 100	36	NEMA 145 TC
14	IEC 112	38	NEMA 182 TC
16	IEC 132	40	NEMA 184 TC
		42	NEMA 213 TC
		44	NEMA 215 TC

Costruzione / Construction

C	CC	Monoblocco / Close Coupled (standard)
B	BF	Asse nudo / Bare Shaft

Application Fields:

- **Fine Chemical Industry.**
- **Petrochemical Industry**
- **Semi-Conductor Industry**
- **Power Plant**
- **Pulp and Paper Industry**
- **Recycling Industry - Plating Industry**
- **Chemcical Industry**
- **PCB Industry**
- **Waster Water Industry**
- **Pharmaceutical Industry**
- **Galvanizing Industry**
- **Plating Industry**

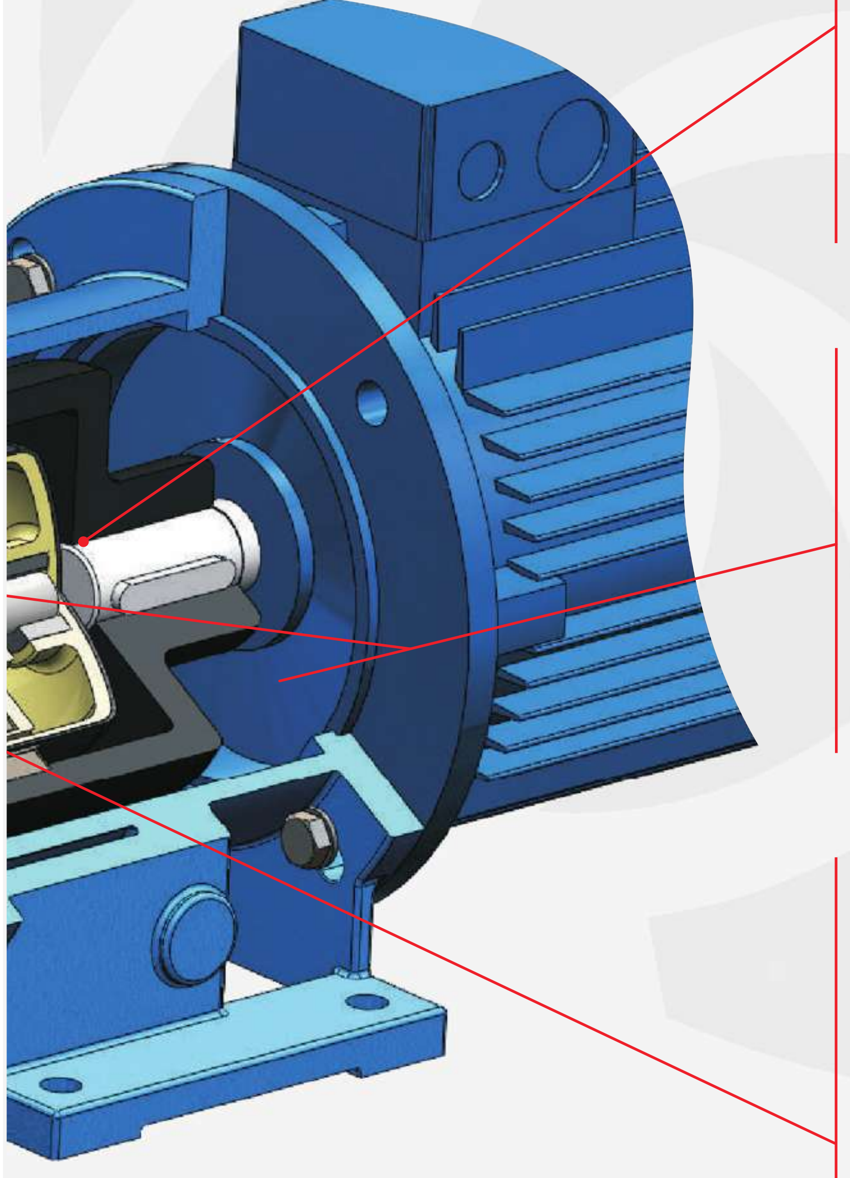

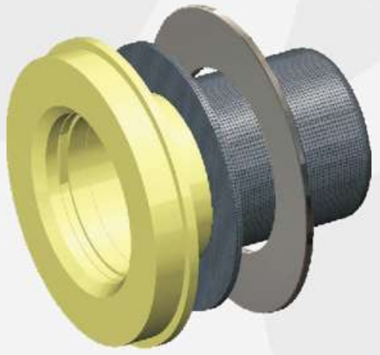

Double shell design with signle piece primary shell made of thermoplastic materials , in PP GFR, PVDF CFR.
Zero magnetic losses. No Eddy current lost, no waste of

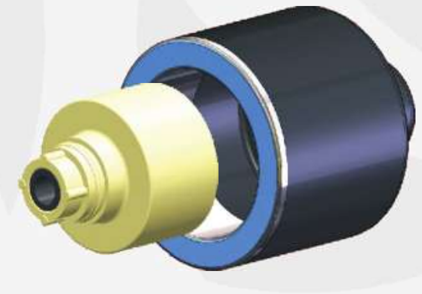

Totally encapsulated high power synchronous magnetic coupling with magnetic elements being mechanically locked. Insure the magnetic elments retain its position under unfavourable atmospheric conditions.
Magnetic elements are dislodged on conventional glue system when operating in corrosive and high heat environment which

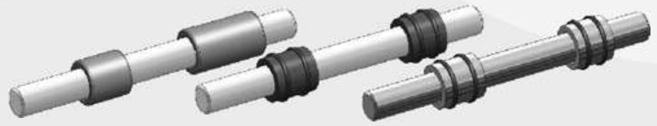

Shaft is frmly supported by front casing shaft support and rear casing support which design for handling high radial load and eradicate shaft defection. Over size front and rear thrust bearings design for handling high axial load.
Field assembling of the product lubricated bearing arrangement does not require special tools.
The Shaft/ Bearing materials are available in three different configurations to provide the best solution each specific application:

- PTFEC – ALUMINA 99,7% (standard);
- CARBON – ALUMINA 99,7%,
- Silicon Carbide (SSIC)
- Silicon Carbide (SSIC).

Pump Performances

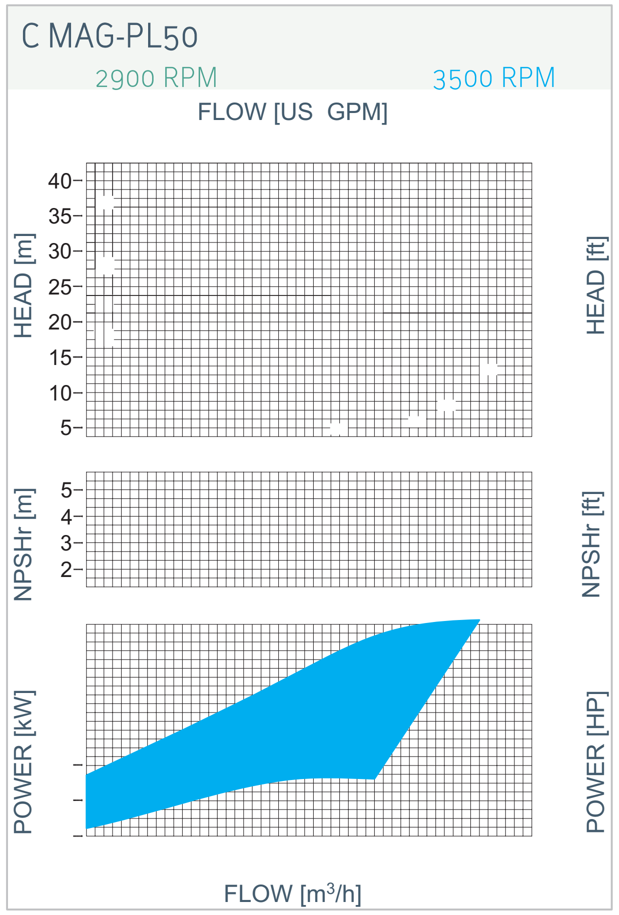

C MAG-PL50